Building Improvement Grant Program Agreement

This Building Improvement Grant Program Agreement ("Agreement") is made by and between the City of Saginaw (the "City") and Frank Riley ("Property Owner").

WITNESSETH:

WHEREAS, the Property Owner is the owner of property located at216 E. McLeroy Boulevard, Saginaw, Texas; and

WHEREAS, Texas Local Government Code Chapter 380 allows the City to provide incentives for the promotion of economic development; and

WHEREAS, the promotion of the redevelopment of commercial properties in the City promotes economic development within the City and is essential for the continued economic growth and vitality of the City; and

WHEREAS, the Building Improvement Grant Program will enhance the commercial viability and sustainability of commercial properties in the City, improve the physical appearance of businesses and visibly enhance the City's commercial corridors, and aid in the retention and expansion of existing businesses; and

WHEREAS, the City has determined that providing an economic development incentive in accordance with this Agreement will further the objectives of the City, will benefit the City and the City's inhabitants, will promote local economic development, and will stimulate business and commercial activity in the City; and

NOW THEREFORE, in consideration of the foregoing, and on the terms and conditions hereinafter set forth, and other valuable consideration the receipt and sufficiency of which are hereby acknowledged, the parties agree as follows:

Section 1. Term

The term of this Agreement shall begin on the date of Property Owner execution listed below and shall continue until the three-year anniversary of the date that the final Building Improvement Grant is paid by the City, unless sooner terminated as provided herein.

Section 2. Definitions

The terms used in this Agreement shall have the meanings ascribed to them in the City of Saginaw Building Improvement Grant Policy. The term "Impositions" shall mean: all taxes, assessments, use and occupancy taxes, charges, excises, license and permit fees, and other charges by public or governmental authority, general and special, ordinary and extraordinary, foreseen and unforeseen, which are or may be assessed, charged,

levied, or imposed by any public or governmental authority on the Property Owner or any property or any business owned by Property Owner within the City.

Section 3. Economic Development Incentive

(a) Payment. Subject to the Property Owner's continued satisfaction of the terms and conditions of this Agreement and of the Policy, and the obligation of the Property Owner to repay the Incentive pursuant to Section 5(b) hereof, the City agrees to provide the Building Improvement Grant to the Property Owner to be paid in a single lump-sum payment after Property Owner makes a written request for reimbursement, in accordance with the requirements of the Policy. The total Building Improvement Grant shall be an amount not to exceed $3,000.00 and eligibility for any Enhancement category shall be limited as set forth in the Policy.

(b) Current Revenue. The Building Improvement Grant made hereunder shall be paid solely from lawfully available funds that have been appropriated by the City. Under no circumstances shall City's obligations hereunder be deemed to create any debt within the meaning of any constitutional or statutory provision. None of the City's obligations under this Agreement shall be pledged or otherwise encumbered in favor of any commercial lender and/or similar financial institution or other party.

Section 4. Building Improvement Grant Conditions

(a) Conditions. The City's obligation to pay the Building Improvement Grant shall be conditioned upon the Property Owner's continued compliance with and satisfaction of the terms and conditions of this Agreement and the Policy, except those portions of the Policy that have been specifically waived or modified by the City Council. A detailed summary of the required Enhancements and required Construction Costs is set forth in the attached and incorporated Exhibit "A" hereto. A copy of the Policy is hereby attached hereto and incorporated herein as Exhibit "B" to this Agreement.

(b) Inspections. The Property Owner agrees that City, upon reasonable advance notice, may inspect the Enhancements to determine compliance with the terms of the Agreement.

(c) Construction Costs. The Property Owner shall, as a condition precedent to the City's payment of the Building Improvement Grant, provide copies of invoices, receipts and other documentation as may be reasonably requested by the Staff to verify the costs incurred and paid by the Property Owner for construction of the Enhancements.

Section 5. Termination

(a) This Agreement shall terminate upon the occurrence of any one of the following:

(1) mutual agreement of the parties;

(2) the Expiration Date;

(3) at the City's option, if any Impositions owed to the City or the State of Texas by Property Owner shall become delinquent (provided, however Property Owner retains the right to timely and properly protest and contest any such Impositions);

(4) by the City in the event Property Owner breaches any of the terms or conditions of this Agreement and such breach is not cured within sixty (60) days after written notice thereof;

(5) by City, if the Property Owner suffers an event of bankruptcy or insolvency;

(6) by City, if any subsequent Federal or State legislation or any final, non-appealable decision of a court of competent jurisdiction declares or renders this Agreement invalid, illegal or unenforceable; or

(b) In the event of termination by the City pursuant to (a)(3), (4), (5), or (6) the Property Owner shall immediately repay to the City an amount equal to Building Improvement Grant paid to Property Owner, if any, prior to termination of this Agreement.

Section 6. Miscellaneous

(a) Assignment. This Agreement may not be assigned without the prior written consent of the City.

(b) Binding Agreement. The terms and conditions of this Agreement are binding upon the successors and assigns of the parties hereto.

(c) Limitation on Liability. It is understood and agreed between the parties that the Property Owner, in satisfying the conditions of this Agreement, has acted independently, and City assumes no responsibilities or liabilities to third parties in connection with these actions.

(d) No Joint Venture. It is acknowledged and agreed by the parties that the terms hereof are not intended to and shall not be deemed to create a partnership or joint venture among the parties.

(e) Authorization. Each party represents that it has full capacity and authority to grant all rights and assume all obligations that are granted and assumed under this Agreement.

(f) Notice. Any notice required or permitted to be delivered hereunder shall be deemed received three days thereafter sent by United States Mail, postage prepaid, certified mail, return receipt requested, addressed to the party at the address set forth below or on the day actually received if sent by courier or otherwise hand delivered.

If intended for Property Owner, to:

Frank Riley
6704 Azle Ave.
Lake Worth, TX 76135

If intended for City, to:

Attn: City Manager
City of Saginaw, Texas
P. O. Box 79070
Saginaw, Texas 76179

(g) Indemnification. **THE PROPERTY OWNER HEREBY CERTIFIES THAT THE PROPERTY OWNER IS SOLELY RESPONSIBLE FOR OVERSEEING THE WORK, AND WILL NOT SEEK TO HOLD THE CITY, THE BOARD, AND / OR THEIR AGENTS, EMPLOYEES, OFFICERS, AND / OR DIRECTORS LIABLE FOR ANY PROPERTY DAMAGE, PERSONAL INJURY, OR OTHER LOSS RELATED IN ANY WAY TO THIS AGREEMENT OR THE POLICY, AND AGREES TO INDEMNIFY THE CITY, THE BOARD, AND THEIR AGENTS, EMPLOYEES, OFFICERS, AND DIRECTORS FROM ANY CLAIMS OR DAMAGES RESULTING FROM THE PROJECT, INCLUDING REASONABLE ATTORNEY FEES.**

(h) Entire Agreement. This Agreement is the entire Agreement between the parties with respect to the subject matter covered in this Agreement. There is no other collateral oral or written Agreement between the parties that in any manner relates to the subject matter of this Agreement, except as provided in any Exhibits attached hereto.

(i) Governing Law. The Agreement shall be governed by the laws of the State of Texas; and venue for any action concerning this Agreement shall be in the State District Court of Tarrant County, Texas. The parties agree to submit to the personal and subject matter jurisdiction of said court.

(j) Amendment. This Agreement may only be amended by the mutual written agreement of the parties.

(k) Legal Construction. In the event any one or more of the provisions contained in this Agreement shall for any reason be held to be invalid, illegal, or unenforceable in any

respect, such invalidity, illegality, or unenforceability shall not affect other provisions, and it is the intention of the parties to this Agreement that in lieu of each provision that is found to be illegal, invalid, or unenforceable, a provision shall be added to this Agreement which is legal, valid and enforceable and is as similar in terms as possible to the provision found to be illegal, invalid or unenforceable.

(l) Recitals. The recitals to this Agreement are incorporated herein.

(m) Counterparts. This Agreement may be executed in counterparts. Each of the counterparts shall be deemed an original instrument, but all of the counterparts shall constitute one and the same instrument.

(n) Survival of Covenants. Any of the representations, warranties, covenants, and obligations of the parties, as well as any rights and benefits of the parties, pertaining to a period of time following the termination of this Agreement shall survive termination.

City of Saginaw, Texas

By:

Todd Flippo, Mayor,

Attest:

By:

City Secretary

Executed on this _____ day of _____, 20 .

Property Owner

By: _____

Name:

Saginaw, Texas

Application for Building Improvement Grant

Contact: Alora Wachholz, EDC Executive Director - (817) 230-0331 - aloraw@saginawtx.org

1	PROJECT INFORMATION			
A	**Property Address**: 216 E McKeroy Saginaw, Tx 76179			
B	**Estimated Begin Work Date**: 7-5-19		**Estimated Completion Date**: 8-20-19	
C	**Years in business at this location**: 20yrs			
D	**Reason for requesting grant**: Improvement of Building Appearance			
2	**ELIGIBILITY OF PROPERTY**			
	Yes	**No**	**Item**	**Notes**
A	✓		Within the City?	•
B	✓		Commercially zoned?	•
C	✓		Tax Paying entity?	•
D	✓		City taxes in good standing?	• 2nd half personal property due 6/30/19
E	✓		No City liens existing?	•
F	✓		Proof of ownership provided?	•
G		✓	Outstanding code violations?	•
H	✓		Frequency of Grants OK?	• In accordance with Section 3.1.8
3	**ELIGIBILITY OF BUSINESS**			
	Yes	**No**	**Item**	**Notes**
A	✓		Business taxes in good standing?	•
B	✓		If not owner, authorization provided?	•

4	Enhancements	Total Cost	Policy Max %	Policy Max $	Amount Requested	Amount Approved
A	Façade: (Section 4.3) •	5000.00$	50 %	$5,000	2500.00$	$
B	Interior Renovation: (Section 4.4) •	4792.00$	50 %	$5,000	2396.00 $	$
C	Landscaping: (Section 4.5) •	$	50 %	$5,000	$	$
D	Lighting: (Section 4.6) •	1,000.00 $	50 %	$5,000	500.00 $	$
E	Parking / Driveways: (Section 4.7) •	$	50 %	$5,000	$	$
F	Pedestrian Amenities: (Section 4.8) •	$	50 %	$5,000	$	$
G	Signage: (Section 4.9) •	$	50 %	$5,000	$	$
H	Code Compliance: (Section 4.10) •	$	50 %	$5,000	$	$
I	Demolition: (Section 4.11) •	2000.00$	50 %	$5,000	1000.00$	$
J	Public Art: (Section 4.12) •	$	50 %	$5,000	$	$
K	(Max. Grant Per Policy = $5,000) **TOTAL BUILDING IMPROVEMENT GRANT APPROVED:**					
L	**Describe any planned Non-Grant Enhancements**:					

5	**GRANT PRIORITIES**			
	Yes	**No**	**Preferred Area?**	**Notes**
A			Transportation Corridors including; Saginaw Blvd, Bailey Boswell Rd, Old Decatur Rd, Blue Mound Rd (west side), McLeroy Blvd;	•
B			Downtown	•
	Yes	**No**	**Preferred Business?**	**Notes**
C			Retail	•
D			Restaurants	•
E			Professional Office	•
F	✓		Industrial and manufacturing	•
G			Any sales-tax generating business	•
6	**ATTACHMENTS / EXHIBITS**			
	Yes	**No**	**Item**	**Notes**
A	✓		Ownership documentation	•
B			Photos of existing conditions	•
C			Drawing, renderings, plans of the proposed enhancements	•
D			Written description of the enhancements including building materials and color schemes	•
E	✓		Construction cost estimate	•
F			Copy of the signed lease agreement	• If Applicant is not property owner
G			Written support of the grant application from the owner	• If Applicant is not property owner

7	**CONTRACTOR INFORMATION**		
A	**Contractor for**: FRANK RILEY		
	Company Name: HECTOR ESPINOZA		
	Contact Person: HECTOR	Title: OWNER	
	Address: 1818 GOULD AVE FT WORTH, TX 76104		
	Wk Phone: 817-323-8413	Cell:	Fax:
	Email:	Website:	
B	**Contractor for**: FRANK RILEY		
	Company Name: A & B GLASS and Mirror		
	Contact Person: DON BESS	Title:	
	Address: 2806 AZLE AVE FT. WORTH, TX 76106		
	Wk Phone: 817-624-8136	Cell:	Fax:
	Email:	Website:	
C	**Contractor for**:		
	Company Name:		
	Contact Person:	Title:	
	Address:		
	Wk Phone:	Cell:	Fax:
	Email:	Website:	
D	**Contractor for**:		
	Company Name:		
	Contact Person:	Title:	
	Address:		
	Wk Phone:	Cell:	Fax:
	Email:	Website:	

8	**Applicant / Owner Certifications:** In accordance with Resolution 2018-23 adopting the Building Improvement Grant Policy, the undersigned do hereby certify the following:
A	**Section 7.1 - Application Accuracy**: The information provided in the Application, and all that may have been affixed thereto, is true and correct, and that the City may rely on all of the information therein contained, and all that may have been affixed thereto, as being true and correct.
B	**Section 7.2 - Compliance**: I (we) certify that I am (we are) solely responsible for all safety conditions and compliance with all safety regulations, building codes, ordinance and other applicable regulations. Neither approval of an Application nor payment of a Grant upon completion of the project shall constitute approval of the project by any City department, Board Member or Staff or a waiver by the City of any safety regulation, building code, ordinance or other applicable regulation.
C	**Section 7.3 - Insurance**: I (we) certify that I (we) maintain sufficient insurance coverage for property damage and personal injury liability relating to the project.
D	**Section 7.4 - Maintenance**: I (we) certify that the Enhancements, once approved by the City shall be maintained for a period of three (3) years from the date of payment. No changes shall be made without prior written approval from the City.
E	**Section 7.5 - Discretionary Rights**: I (we) certify that I (we) acknowledge that the City has the absolute right of discretion in deciding whether or not to approve a matching Grant relative to the Application, whether or not such discretion is deemed arbitrary or without basis in fact, including the right to approve or disapprove a Grant on terms and conditions that are contrary to the guidelines of this policy.
F	**Section 7.6 - Policy Promotion**: I (we) authorize the City to use an approved project to promote the merits of this Policy, including but not limited to displaying a sign at the Property or Business during and within thirty (30) days after construction, and using photographs and descriptions of the project in distribution material, press releases, social media and on the City's website.
G	**Section 7.7 - Indemnification**: **I (we) certify that I am (we are) solely responsible for overseeing the work, and will not seek to hold the City, the Board, and / or their agents, employees, officers, and / or directors liable for any property damage, personal injury, or other loss related in any way to this Policy, and by submission of an Application, agree to indemnify the City, the Board and / or their agents, employees, officers, and / or directors from any claims or damages resulting from the project, including reasonable attorney fees.**
9	**I (we) hereby affirm the Certifications noted above and approve this Application for Building Improvement Grant incentives and the Enhancements identified herein.**

Property Owner		**Applicant / Business Representative**	
Company: FRANK RILEY		Company:	
Signed: Frank Riley		Signed:	
Name: FRANK RILEY		Name:	
Title: OWNER		Title:	
W: 817-237-8104	C: 817-991-6979	W:	C:
EM: rpm0221@aol.com		EM:	
Address: 6704 AZLE AVE FT WORTH, TX 76135		Address:	

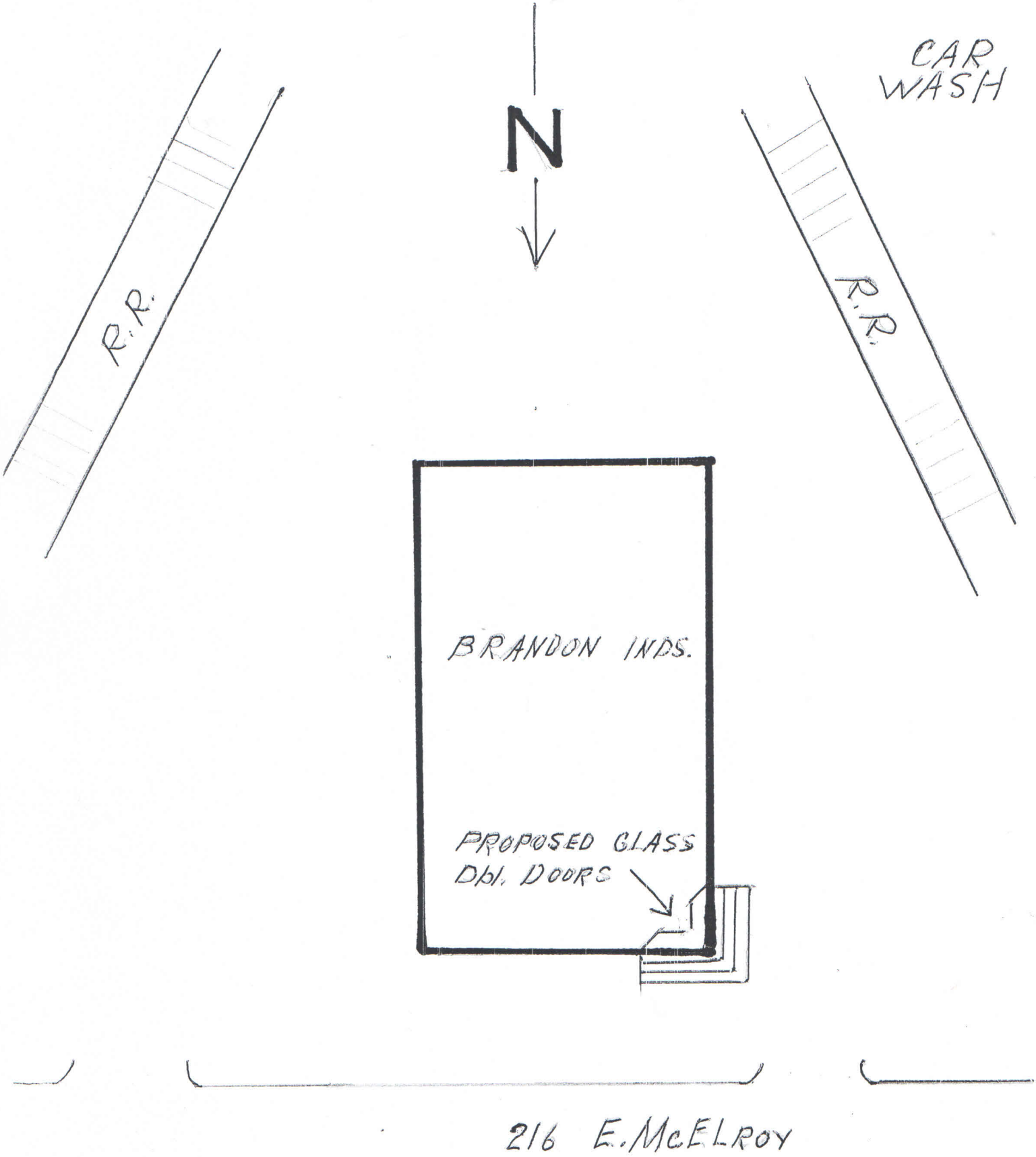
N
CAR WASH
R.R.
R.R.
BRANDON INDS.
PROPOSED GLASS
Dbl. DOORS
216 E. McELROY

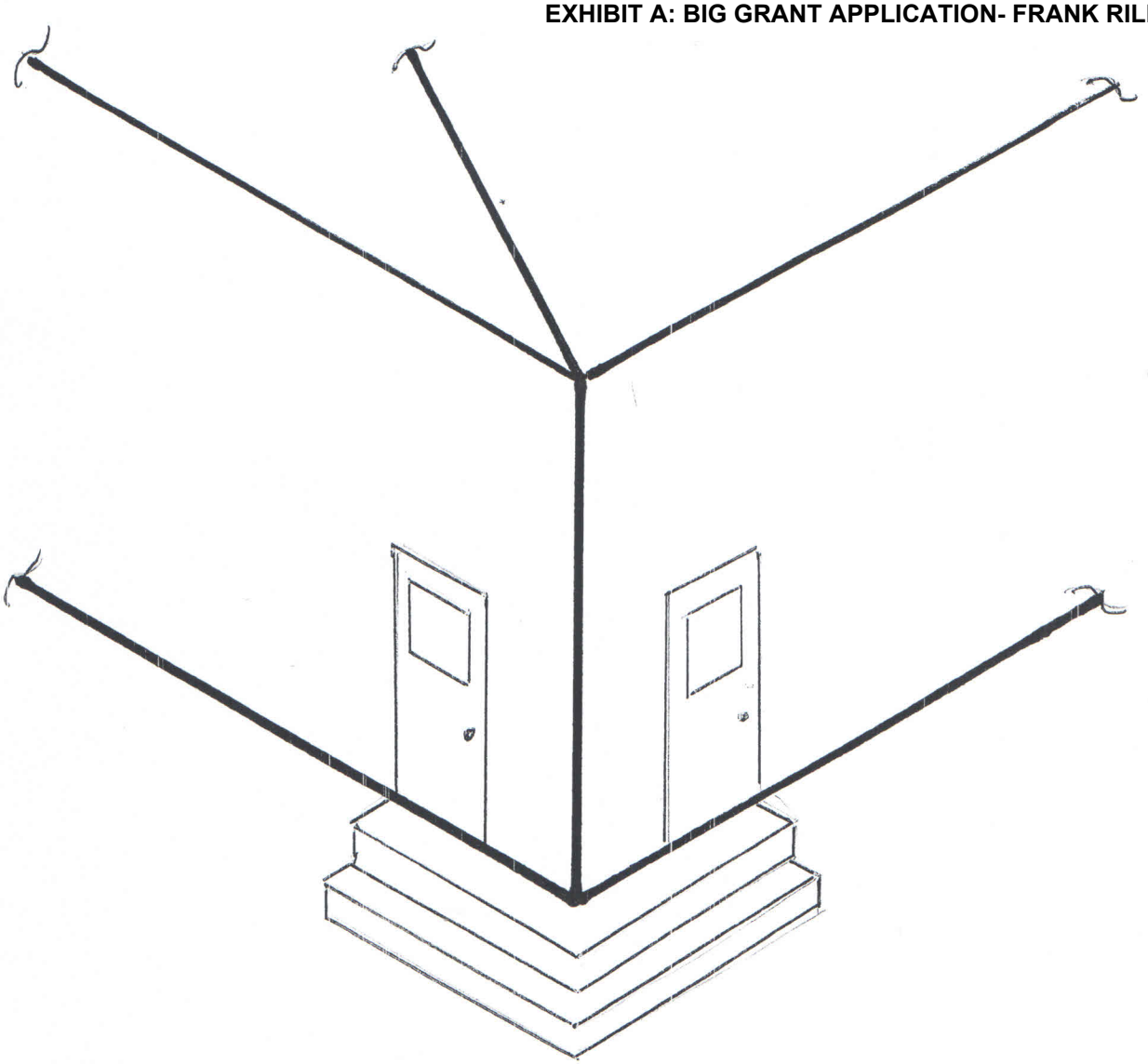

EXISTING
FRONT DOORS

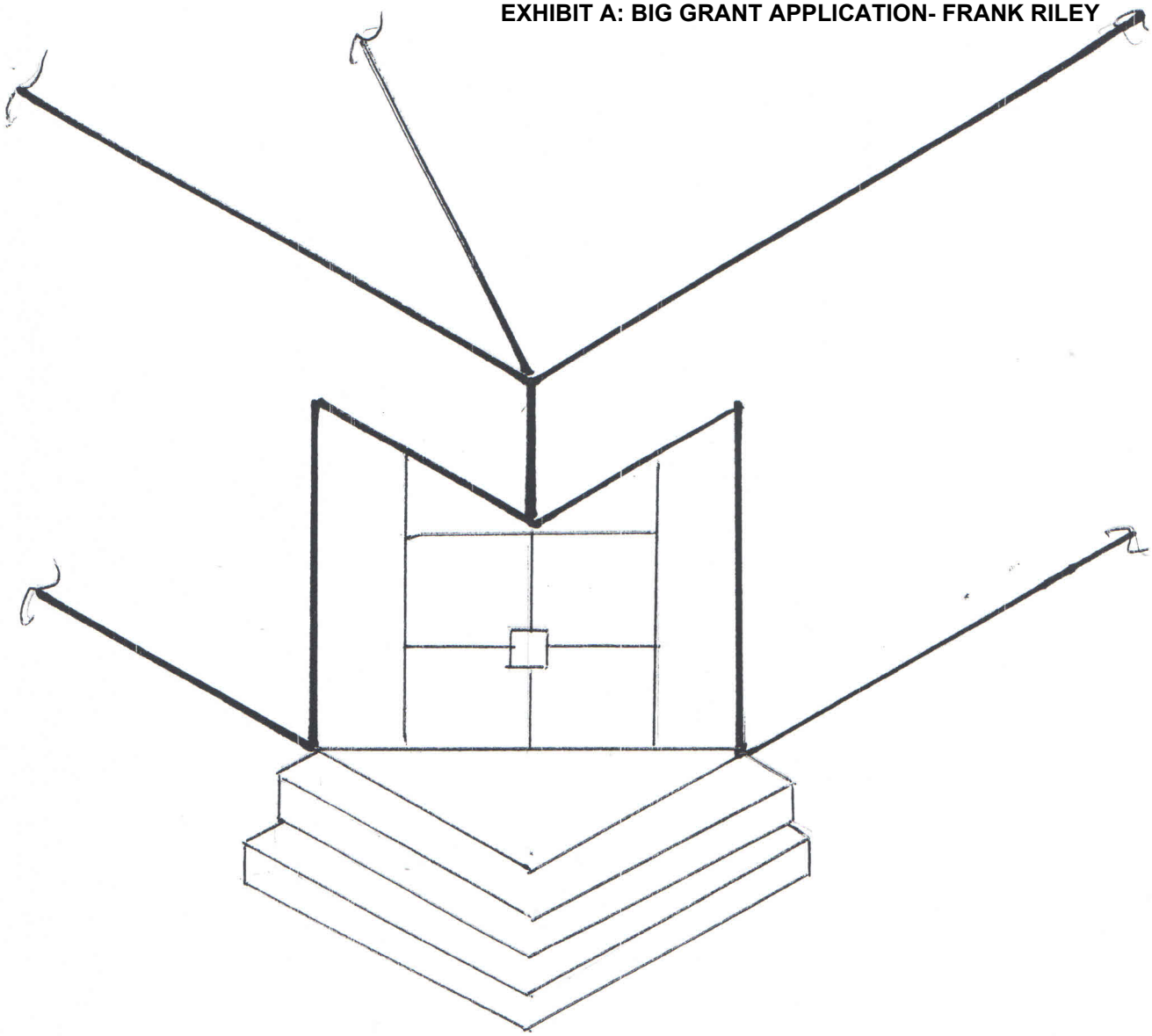

PROPOSED GLASS
Dbl. DOORS

PROPOSAL

Date: 6/11/19

To: Frank Riley

From: A&B Glass and Mirror
2806 Azle Ave.
Fort Worth TX 76106
Phn 817.624.8136
817.626.1520
Fax 817.625.5006

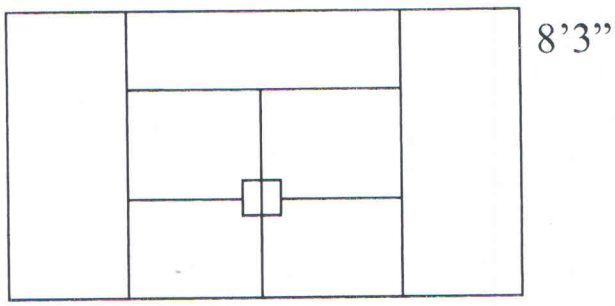

6' x 7' stock pair doors, frame, transom and sidelites
Standard hardware
¼ gry lite tempered safety glass to match existing

Materials and Labor
$4,842 plus tax

Company	Signature	Title	Date

QUOTE

Hector Espinoza

1818 Gould Avenue
Fort Worth, Texas 76104
817-323-8413

DATE: JUNE 10, 2019

EXPIRATION DATE: THIRTY DAYS

TO Frank Riley
6704 Azle Avenue
Lake Worth, TX 76135
Phone: 817-237-8104

SALESPERSON	JOB	PAYMENT TERMS	DUE DATE
	216 E. McLeroy	Due upon Completion	

QTY	DESCRIPTION	UNIT PRICE	LINE TOTAL
	Build temporary wall with door to keep tenants in operation.		
	Remove two existing steel doors		
	Replace inside walls for installation of new glass double doors		
	Re-work necessary electric		
	Paint inside as needed		
	Rework floor as needed		
	Furnish and install trench drains at bottom of concrete steps		
		TOTAL BASE BID	7,950.00

WENDY BURGESS
TARRANT COUNTY
TAX ASSESSOR-COLLECTOR

@TarrantCoTax
Facebook.com/TarrantCountyTAC

100 E. Weatherford, Fort Worth, TX 76196
(817) 884-1110
e-mail:taxoffice@tarrantcounty.com
web:www.tarrantcounty.com

V1.10

2018 TAX STATEMENT

IN GOD WE TRUST

DATE: 06/17/2019

ACCOUNT: 00006821901

LEGAL: ARMENDARIS, JUAN SURVEY
ABSTRACT 59 TRACT 4A IMP ONLY

e-STATEMENT

Visit our website for online credit card and eCheck payments
Pay by phone at 817-884-1110

OWNER: RILEY FRANK JR
PARCEL ADDRESS: 0000216 E MCLEROY BLVD
EXEMPTIONS:

IMPROVEMENT VAL 75,000	APPRAISED VAL 75,000					
TAXING ENTITIES	APPRAISED VALUE	EXEMPTION AMOUNT	TAXABLE VALUE	TAX RATE PER $100	BASE TAX	TAXES DUE CURRENTLY
SAGINAW CITY	75,000	0	75,000	0.471800	353.85	0.00
TARRANT COUNTY	75,000	0	75,000	0.234000	175.50	0.00
T C HOSPITAL	75,000	0	75,000	0.224429	168.32	0.00
T C COLLEGE	75,000	0	75,000	0.136070	102.05	0.00
EAGLMT/SAG ISD	75,000	0	75,000	1.540000	1155.00	0.00
				TOTAL TAXES	1,954.72	0.00

TOTAL AMOUNT DUE **0.00**
INCLUDES PAYMENTS RECEIVED

IF YOU ARE 65 YEARS OF AGE OR OLDER OR ARE DISABLED, AND YOU OCCUPY THE PROPERTY DESCRIBED IN THIS DOCUMENT AS YOUR RESIDENCE HOMESTEAD, YOU SHOULD CONTACT THE APPRAISAL DISTRICT REGARDING ANY ENTITLEMENT YOU MAY HAVE TO A POSTPONEMENT IN THE PAYMENT OF THESE TAXES.

***ADDITIONAL CITY SALES TAX REDUCED YOUR CITY AD VALOREM TAX BY $63.32.**

****YOUR CHECK WILL BE CONVERTED INTO AN ELECTRONIC FUND TRANSFER****

RILEY FRANK JR

RETURN WITH PAYMENT

00006821901
00006821901

PAY THIS AMOUNT **$0.00**
Delinquent after: 1/31/2019

00006821901 2018

78092632
78092632

IF PAID IN	AMOUNT DUE
JUL	0.00
AUG	0.00

RILEY FRANK JR DBA SAGINAW RENTAL & LEASING
6704 AZLE AVE
FORT WORTH, TX 76135-2223

Make checks payable to:
WENDY BURGESS. TAX-ASSESSOR-COLLECTOR
PO BOX 961018
FORT WORTH TX 76161-0018

00006821901 0000000000 0000000000 0000000000 0617201900000

EXHIBIT A: BIG GRANT APPLICATION- FRANK RILEY

WENDY BURGESS
TARRANT COUNTY
TAX ASSESSOR-COLLECTOR

@TarrantCoTax
Facebook.com/TarrantCountyTAC

100 E. Weatherford, Fort Worth, TX
(817) 884-1100
e-mail:taxoffice@tarrantcounty.com
web:www.tarrantcounty.com

V1.10

2018 TAX STATEMENT

IN GOD WE TRUST

DATE: 06/17/2019

ACCOUNT: 00009852107

LEGAL: BRANDON INDUSTRIES PERSONAL PROPERTY TANGIBLE INDUSTRIAL

e-STATEMENT

MasterCard VISA AMERICAN EXPRESS DISCOVER

Visit our website for online credit card and eCheck payments
Pay by phone at 817-884-1110

OWNER: BILL BARRETT INDUSTRIES INC
PARCEL ADDRESS: 0000216 E MCLEROY BLVD
EXEMPTIONS:

APPRAISED VAL 126,321						
TAXING ENTITIES	APPRAISED VALUE	EXEMPTION AMOUNT	TAXABLE VALUE	TAX RATE PER $100	BASE TAX	TAXES DUE CURRENTLY
SAGINAW CITY	126,321	0	126,321	0.471800	595.98	0.00
TARRANT COUNTY	126,321	0	126,321	0.234000	295.59	0.00
T C HOSPITAL	126,321	0	126,321	0.224429	283.50	0.00
T C COLLEGE	126,321	0	126,321	0.136070	171.88	0.00
EAGLMT/SAG ISD	126,321	0	126,321	1.540000	1945.34	0.00
				TOTAL TAXES	3,292.29	0.00

TOTAL AMOUNT DUE **1,903.69**
INCLUDES PAYMENTS RECEIVED

IF YOU ARE 65 YEARS OF AGE OR OLDER OR ARE DISABLED, AND YOU OCCUPY THE PROPERTY DESCRIBED IN THIS DOCUMENT AS YOUR RESIDENCE HOMESTEAD, YOU SHOULD CONTACT THE APPRAISAL DISTRICT REGARDING ANY ENTITLEMENT YOU MAY HAVE TO A POSTPONEMENT IN THE PAYMENT OF THESE TAXES.

***ADDITIONAL CITY SALES TAX REDUCED YOUR CITY AD VALOREM TAX BY $106.65.**

TENANT PAID 1/2 TAEXES
BALANCE DUE JUNE 30, 2019

****YOUR CHECK WILL BE CONVERTED INTO AN ELECTRONIC FUND TRANSFER****

BILL BARRETT INDUSTRIES INC

NOTE: TOTAL SHOWS CURRENT AND PRIOR YEAR TAXES DUE.

00009852107
00009852107

RETURN WITH PAYMENT

PAY THIS AMOUNT **$1,903.69**
Delinquent after: 1/31/2019

IF PAID IN	AMOUNT DUE
JUL	1,917.92
AUG	1,932.16

00009852107 2018
78092634
78092634

BILL BARRETT INDUSTRIES INC
216 E MCLEROY BLVD
SAGINAW, TX 76179-1650

Make checks payable to:
WENDY BURGESS. TAX-ASSESSOR-COLLECTOR
PO BOX 961018
FORT WORTH TX 76161-0018

00009852107 0000190369 0000191792 0000193216 0617201900000

Saginaw, Texas
Building Improvement Grant Policy

WHEREAS, the City Council of the City of Saginaw, Texas (Council) desires to implement a matching grant program to encourage the development, retention, or expansion of business enterprises in the City; and

WHEREAS, Chapter 380 of the Texas Local Government Code authorizes municipalities to establish and provide for the administration of programs that promote economic development and stimulate business and commercial activity in the City; and

WHEREAS, the City Council on December 4, 2018 considered and approved Resolution 2018-23 approving this Building Improvement Grant Policy (Policy).

BE IT KNOWN THAT, the terms and conditions of the Policy, having been reviewed by the Council and found to be acceptable and in the best interest of the City and its citizens and businesses, are hereby approved.

Section 1.
Introduction & Goals

This program is a matching grant program that reimburses commercial property owners or business operators for Eligible Enhancements made to the Property. The goals of this Policy are to:

1.1. Enhance the commercial viability and sustainability of commercial properties in the City;

1.2. Improve the physical appearance of businesses and visibly enhance the City's commercial corridors;

1.3. Aid in the retention and expansion of existing businesses;

1.4. Increase the taxable value of commercial properties in the City;

1.5. Enhance commercial areas through the placement of Public Art;

1.6. Increase the marketability and occupancy rate of commercial buildings hindered by an outdated appearance;

1.7. Increase the safety of a commercial area and stimulate more public interaction; and

1.8. Provide incentives in areas and to businesses most likely to stimulate similar enhancements by other private entities.

Section 2.
Definitions

The following definitions shall apply to the terms used in this Policy:

Agreement: A written performance agreement between the Board and the Applicant.

Applicant: Shall mean the Property owner or business occupant signing the Application for a Building Improvement Grant.

Application: Shall mean the Application for Building Improvement Grant Policy Incentives as maintained by Staff.

Board: Shall mean the Board of the Saginaw Economic Development Corporation of the City. Prior to formulation of the Board or in its absence in the future, the City Council shall perform all duties of the Board.

Building Improvement Grant: Shall mean the financial support to make designated Property Enhancements as approved, and sometimes referred to as "Grant."

City: The City of Saginaw, Texas.

City Council: The City Council of the City.

Code Violations: Shall be any violation of the City's code of ordinances.

Construction Costs: The cost of permits, fees, construction materials, and installation labor. All other associated costs are deemed excluded, including, but not exclusively, the following costs: design, construction document preparation, bidding, sweat equity and construction financing.

Eligible Enhancements: Shall mean the Enhancements identified as eligible in Section 4 herein.

Enhancements: Shall be as defined in Section 4 herein.

Façade: Shall mean the exterior of a building.

Notice to Proceed: A written notice authorizing the Applicant to begin construction as approved.

Policy: Shall mean this Building Improvement Grant Policy.

Property: Shall mean the physical lot and / or building to which Enhancements are being made.

Public Art: Shall mean sculptures, murals, architectural features and similar tangible exhibits, and specifically excludes performing arts.

Staff: The City Manager or their designee.

Section 3.
Eligibility

The following Properties and Businesses are eligible to receive Grants.

3.1. Properties: Only properties meeting the following requirements at the time an Application is submitted shall be eligible to receive Grants as outlined by this Policy:

3.1.1. Within the City: Property must be located within the City's municipal boundaries.

3.1.2. Non-Residentially Zoned: Property must be zoned for uses other than residential uses and the current use of the Property may not be residential.

3.1.3. Tax-Paying Entity: The Property must be subject to the City's Ad Valorem property tax.

3.1.4. Financial Standing: Property shall be in good standing as it relates to taxes or any monies due to the City.

3.1.5. City Liens: Property shall be in good standing as it relates to any liens held by the City.

3.1.6. Ownership: Property owners must provide sufficient proof of ownership.

3.1.7. Code Violations: Property must not have any outstanding code violations.

3.1.8. Frequency: Property must not have received a Grant for the same category of Enhancement (e.g. Façade, Landscaping) in a twelve month period.

3.2. Businesses: Only businesses meeting the following requirements shall be eligible to receive benefits outlined by this Policy:

3.2.1. Financial Standing: The business shall be in good standing as it relates to taxes or any monies due to the City.

3.2.2. Tax-Paying Entity: The business must be a tax-paying entity.

3.2.3. Property Owner Approval: Businesses, if not the owner of the property to be occupied, must provide a copy of their lease agreement and support of the Application from the Property owner prior to approval of the Application.

Section 4.
Enhancements

4.1. Aspirations: As with any policy or regulation, it is difficult to precisely regulate factors that are not easily defined. With that in mind, the following are to be considered aspirations for contemplated Enhancements:

- Enhancements should be compatible with the character and architecture of the individual building and those in proximity;
- Where appropriate, Enhancements may act as a catalyst to create a unique environment;
- Enhancements should make the Property more inviting to the public; and
- Enhancements should be functional as well as visually appealing.

4.2. General Enhancement Eligibility: Property Enhancements shall be deemed as eligible or ineligible for the benefits of this Policy as defined below. In general, the following Enhancements, though not exclusively, are ineligible for all Grants:

- Any Enhancement that does not comply with existing ordinances of the City;
- Any Enhancements made prior to the Notice to Proceed;
- Sweat equity or "in-kind" services;
- New construction which is not specifically listed in this Policy as an Eligible Enhancement;
- Any Enhancements to eliminate Code Violations of a Property or Business;
- Fees for designing, engineering, surveying, legal services, financing, etc.; or
- Any Enhancements not identified as eligible below. A potential applicant may discuss an enhancement not identified below with City staff to ascertain whether or not the enhancement meets the Purpose and Intent of this Policy. If so, an amendment to this Policy may be placed before the City Council to determine the merits of including a new eligible enhancement.

4.3. Façade Enhancements: The following are Eligible Enhancements except as noted otherwise:

4.3.1. Façade Materials: Replacing deteriorated or unsafe façade materials with brick, stone, tile, wood, or siding meeting the City's masonry requirements and / or architectural standards. Removal of "slip" coverings of prior façade materials and re-establishment of historic façade details. Repointing of mortared joints, replacement or repair of damaged masonry.

4.3.2. Cleaning: Pressure washing or sand blasting existing facades, cleaning of tiles.

4.3.3. Painting: Scraping, priming and otherwise preparing the surface and painting.

4.3.4. Window / Doors: Replacement of or improvements to existing windows or doors that are visible from a public street. New windows and doors matching replaced windows or doors. Replacement of broken glass panes.

4.3.5. Awnings / Canopies: Replacement of or improvements to existing awnings or canopies. New awnings or canopies.

4.3.6. Historical Restoration: Restoration of architectural details of historic significance and / or removal of elements covering such details.

4.3.7. Roof Repair: Replacement or repair of all or portions of the roof.

4.3.8. Gutters and Downspouts: Replacement or repair of existing gutters and / or downspouts.

4.3.9. Ineligible: Though not an all-inclusive list, the following are specifically not eligible: burglar bars, painting a new building.

4.4. Interior Renovation: The following are Eligible Enhancements except as noted otherwise:

4.4.1. Renovations: Renovations that enhance the commercial usability of the building.

4.4.2. Ineligible: Though not an all-inclusive list, the following are specifically not eligible: painting, wallpaper, and other types of aesthetic treatments.

4.5. Landscaping: The following are Eligible Enhancements except as noted otherwise:

4.5.1. Edging: Providing a perimeter to shrub beds with materials deemed to be of a long life, e.g. brick, stone, concrete, steel.

4.5.2. Shrubs and Trees: Shrubs and / or trees of a variety that are sustainable in the area when combined with removal of existing shrubs and / or trees that are either overgrown or of poor quality. Preference is given to xeriscape approaches using drought-tolerant plant species.

4.5.3. Seasonal Color: Providing one-time planting of annual or perennial flowers in critical areas adequate to provide an appealing impact.

4.5.4. Irrigation: Automatic irrigation system complying with all code requirements. Preference is given to water conservation measures and approaches (e.g. drip irrigation).

4.5.5. Lawn Renovation: Removal or re-establishment of an existing lawn with a desirable type of lawn. (An automatic irrigation system is required with this Enhancement.)

4.5.6. Fencing: Replacement of fencing or installation of new fencing that is visually appealing.

4.5.7. Ineligible: Though not an all-inclusive list, the following are specifically not eligible: landscape pruning, mowing and / or maintenance.

4.6. Lighting: The following are Eligible Enhancements:

4.6.1. Interior: Lighting of a permanent nature that enhances the commercial viability of a building.

4.6.2. Pedestrian: Increases in lighting in pedestrian areas on or adjacent to the Property, e.g. sidewalks, parking lots.

4.6.3. Accents: Lighting that accentuates exterior features of the building or Property creating a pleasant ambience on the Property.

4.6.4. Signage: Lighting that illuminates signage identifying the business.

4.7. Parking / Driveways: The following are Eligible Enhancements except as noted otherwise:

4.7.1. Reconstruction: Removal of existing pavement, gravel, curbing, drives, accessibility ramps, etc. and replacement with reconstruction meeting City requirements.

4.7.2. Resurfacing: Re-topping asphalt parking areas.

4.7.3. Restriping: Repainting of parking stall stripes and / or fire lane graphics meeting the City's requirements.

4.7.4. Ineligible: Though not an all-inclusive list, the following are specifically not eligible: Installation, repair or replacement of any surface that is not an all-weather hard surface as required by the City's code of ordinances.

-- The remainder of this page purposefully left blank. --

4.8. Pedestrian Amenities: The following are Eligible Enhancements:

4.8.1. Paving: Paving of a unique nature in areas that allow customers to congregate.

4.8.2. Seating Areas: Provisions for seating in areas where customers may congregate before, during or after supporting the business.

4.8.3. Shade: Provisions for shading pedestrian areas to include permanent or temporary canopies, awnings, umbrellas or similar shade structures.

4.8.4. Music: Provisions for permanent installation of fixtures to accommodate providing music in areas where customers congregate.

4.8.5. Trash Receptacles: Trash receptacles establishing or matching a design theme utilized throughout the pedestrian areas.

4.8.6. Play Equipment: Recreational equipment intended for the entertainment of children when placed on private property in close proximity to the primary building.

4.9. Signage: The following are Eligible Enhancements. The replacement of signs that do not conform to current City requirements is a priority for the City.

4.9.1. Replacing Signs: Replacing existing signs, with new signage that complies with all City requirements.

4.10. Code Compliance: The following are Eligible Enhancements:

4.10.1. Public Accessibility: Reconstruction or new construction to comply with public accessibility requirements.

4.10.2. Fire Suppression Systems: Replacement, upgrade, or installation of fire suppression systems in compliance with current codes.

4.11. Demolition: The costs of demolishing and removing existing structures on a Property may be considered for Property Enhancements.

4.12. Public Art: Providing for the placement of Public Art on the Property.

4.13. Participation Limitations: The potential matching Grant for each type of Enhancement would be the lesser of the Maximum Percentage or Maximum Per Enhancement Category Amount. The Applicant is responsible for the remaining costs of the Enhancement and must complete the full Enhancement to be eligible for the matching Grant.

4.13.1. Maximum Percentage: A Maximum Percentage of fifty percent (50%) shall be the maximum percentage of the total cost of any Enhancement that the City will grant the Applicant.

4.13.2. Maximum Per Enhancement Category: A Maximum Amount of five thousand dollars ($5,000) is the maximum dollar amount to be granted for any category of Enhancement.

4.13.3. Accumulative Maximum Grant: Notwithstanding the Maximum Percentage and Maximum Per Enhancement Category limitations for each type of Enhancement, no Property or Business may receive more than five thousand dollars ($5,000) in matching Grants during one 12-month period. The following examples are provided to clarify different application scenarios:

A. Example 1: Applicant desires to do $12,000 in eligible Landscape Enhancements. By Policy, the maximum Grant allowed by the Max Percentage (50%) would be $6,000, but the maximum Grant allowed by the Max Per Category would be $5,000. The lesser of the two is $5,000 which would be the maximum matching Grant for the $12,000 landscaping project. Further, within a 12-month period the Applicant cannot receive additional grants for any Enhancements (per Section 4.13.3).

B. Example 2: Applicant desires to do $8,000 in eligible Landscape Enhancements. By Policy, the maximum Grant allowed by the Max Percentage (50%) would be $4,000, and the maximum Grant allowed by the Max Per Category would be $5,000. The lesser of the two is $4,000 which would be the maximum matching Grant for the $8,000 landscaping project. Further, within a twelve-month period the Applicant cannot receive more grants for Landscape Enhancements (per Section 3.1.8), but may apply and receive a second matching Grant, not to exceed $1,000 ($5,000 max - $4,000 Grant) for any Enhancement category *other than* Landscaping.

Section 5.
Grant Priorities

The City has determined that the following are priorities for the benefits of this Policy. The evaluation of the merits of any Application shall take into consideration whether or not the Application also meets these priorities.

5.1. Preferred Areas: The following areas of the City are areas of priority for implementation of this Policy:

5.1.1. Transportation Corridors including; Saginaw Blvd, Bailey Boswell Rd, Old Decatur Rd, Blue Mound Rd (west side), McLeroy Blvd; and

5.1.2. Downtown areas.

5.2. Preferred Businesses: The following types of businesses are a priority for implementation of this Policy:

5.2.1. Retail;

5.2.2. Restaurants;

5.2.3. Professional Office;

5.2.4. Industrial and manufacturing; and

5.2.5. Any sales-tax generating business.

Section 6.
Administrative Procedures

Following are the Administrative Procedures regarding the Application for and approval of Building Improvement Grants:

6.1. Pre-Submittal: All Applicants are encouraged to meet with Staff prior to preparation of an Application. Applicants should contact the following to set up a meeting.

Department of Economic Development
333 West McLeroy Blvd, Saginaw, TX 76179
(817) 230-0331

6.2. Application: The submittal of an Application is required prior to any evaluation of the request for Building Improvement Grants. The Application shall be on a form prepared by Staff and available on the City's website or at the location noted in 6.1.

6.2.1. Required Information: The following shall be included with the Application:

A. Proof of ownership of the Property;

B. Photographs of the existing Property;

C. Drawings, renderings, plans of the proposed Enhancements;

D. Written description of the Enhancements including building materials and color schemes to be used;

E. Construction Cost estimate; and

F. If Applicant is not the Property owner:

i. Written approval of the Application from the owner; and

ii. Copy of the signed lease agreement.

6.2.2. Amendments: Staff may amend the form of the Application as needed to more efficiently evaluate the merits of requested Enhancements.

6.3. Review & Evaluation: Following are criteria to review and evaluate the Application:

6.3.1. Review Criteria:

A. Completeness of Application: Completeness of the Application; including all required attachments.

B. Grant Priorities: Whether the Application includes a targeted business classification or whether it is located in a targeted improvement area as defined in Section 5.

C. Impact: An estimation of the impact that the Enhancements might have, particularly as a catalyst for continued private investment.

D. Non-funded Improvements: Are the improvements associated with the Grant part of a larger effort to enhance the Property.

E. Elimination of a Non-Conformity: Do the Enhancements eliminate a legal non-conforming aspect of the Property.

6.3.2. Staff Evaluation and Recommendation: The coordinating Staff member shall convene a team of the appropriate persons to evaluate the Application. Upon review, such team shall prepare a recommendation to forward to the Board.

A. Site Visit: Prior to formal evaluation of the Application, the Applicant shall allow Staff the opportunity to visit the Property to verify its status prior to any Enhancements.

6.4. Approval: The Board shall make the final decision regarding the merits of the Application and the appropriate Property Enhancement Grant to be given, if any, if funds are available as pre-approved by the Council for the funding period. If approval of the Application requires funds not pre-approved by the Council, the board will prepare a recommendation to forward to the Council for final approval. Upon approval of a matching Grant, the Board shall enter into an Agreement with the Applicant on a form acceptable to the City Attorney. The Agreement, at a minimum, must contain the following:

6.4.1. Enhancements: List the specifications of the proposed Enhancements on the Property.

6.4.2. Access: Provide the City and Staff access to the Property to ensure that the Enhancements or repairs are made according to the specifications and conditions in the Agreement.

6.4.3. Grant: Provide for the procedures of the matching Grant payment.

6.4.4. Recapture Provisions: Provide for the repayment of a Grant if the Applicant or the condition of the Property do not fulfill all obligations required under the Agreement. The City may take any remedy necessary to recover the funds, including filing a lien on the Property.

6.5. Pre-Construction Meeting: If the matching Grant is approved as noted above, and if deemed necessary by Staff, the Applicant must attend a pre-construction meeting with Staff to coordinate any required permits, execute Grant documents, and resolve any questions either party might have.

6.6. Notice to Proceed: Upon approval as noted above, Staff shall prepare and issue a written Notice to Proceed authorizing the Applicant to begin work on the Enhancements. The Notice to Proceed shall in no event be regarded as the issuance or approval of a building permit or any other construction permits.

6.6.1. Required: All Grant documents, including the Agreement with the City, must be executed and all required permits must be received prior to issuance of the Notice to Proceed.

6.6.2. Beginning of Work: All work must begin within sixty (60) days of the issuance of the Notice to Proceed.

6.6.3. Completion of Work: All work for approved projects must be complete within ninety (90) days of the Notice to Proceed unless an Applicant's written request for extension is granted in writing by the Board.

6.7. Construction: All construction shall be in accordance with all requirements for permitting and inspection required by the City.

6.8. Verification: Upon completion and approval of the work by the City, Staff shall verify that the work has been performed as authorized in the approval action.

6.8.1. Documentation: The Applicant shall provide Staff with documentation necessary to determine the Construction Costs of the Enhancements as approved, e.g. copies of paid contractor invoices, receipts or processed checks. Construction Costs not supported by adequate documentation shall not be eligible for reimbursement.

6.9. Payment: Upon verification of compliance with the approval action, Staff shall cause a check to be issued to the Applicant in the approved amount.

6.9.1. Cost Overruns: Any costs above and beyond the amounts approved shall be the responsibility of the Applicant.

Section 7.
Applicant / Owner Certifications

The Application shall include the following certifications which shall be affirmed by the Applicant / Owner by signing the Application.

7.1. Application Accuracy: The information provided in the Application, and all that may have been affixed thereto, is true and correct, and that the City may rely on all of the information therein contained, and all that may have been affixed thereto, as being true and correct.

7.2. Compliance: I (we) certify that I am (we are) solely responsible for all safety conditions and compliance with all safety regulations, building codes, ordinance and other applicable regulations. Neither approval of an Application nor payment of a Grant upon completion of the project shall constitute approval of the project by any City department or Staff or a waiver by the City of any safety regulation, building code, ordinance or other applicable regulation.

7.3. Insurance: I (we) certify that I (we) maintain sufficient insurance coverage for property damage and personal injury liability relating to the project.

7.4. Maintenance: I (we) certify that the Enhancements, once approved by the City shall be maintained for a period of three (3) years from the date of payment. No changes shall be made without prior written approval from the City.

7.5. Discretionary Rights: I (we) certify that I (we) acknowledge that the City has the absolute right of discretion in deciding whether or not to approve a matching Grant relative to the Application, whether or not such discretion is deemed arbitrary or without basis in fact including the right to approve or disapprove a Grant on terms and conditions that are contrary to the guidelines of this policy.

7.6. Policy Promotion: I (we) authorize the City to use an approved project to promote the merits of this Policy, including but not limited to displaying a sign at the Property or Business during and within thirty (30) days after construction, and using photographs and descriptions of the project in distribution material, press releases, social media and on the City's website.

7.7. Indemnification: I (we) certify that I am (we are) solely responsible for overseeing the work, and will not seek to hold the City, the Board, and / or their agents, employees, officers, and / or directors liable for any property damage, personal injury, or other loss related in any way to this Policy, and by submission of an Application, agree to indemnify the City, the Board, and / or their agents, employees, officers, and / or directors from any claims or damages resulting from the project, including reasonable attorney fees.

Section 8.
General Provisions

8.1. Termination: The City has the right to terminate any agreement under this Policy for any reason.

8.2. Changes During Construction: If an Applicant seeks to change the scope of their project after a Grant has been approved, the Applicant shall meet with Staff to discuss the desired change. Staff has the authorization to approve minor modifications during construction. Any other desired modification shall be placed before the approving body for reconsideration.

8.3. Flexibility: The terms and conditions of this Policy are a guideline for the Board during their deliberation and evaluation. The City reserves the right to modify the terms and conditions herein at any time, including for any pending application, and may approve a Grant on terms and conditions contrary to the guidelines set forth in this policy.

8.4. Section or Other Headings: Section or other headings contained in this Policy are for reference purposes only and shall not affect in any way the meaning or interpretation of this Policy.

8.5. Severability: In the event that any provision of this Policy is determined to be illegal, invalid, or unenforceable, then, and in that event, it is the intention that the remainder of this Policy shall not be affected thereby.

-- The remainder of this page purposefully left blank. --